Flow Sensor

Suction confirmation of very small workpieces

This flow sensor enables precise suction.

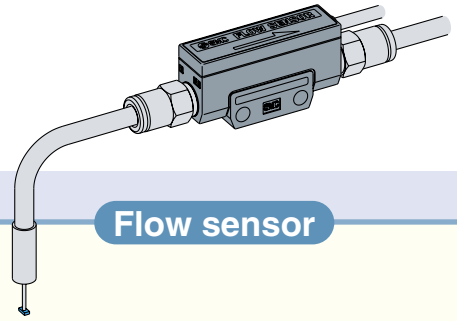

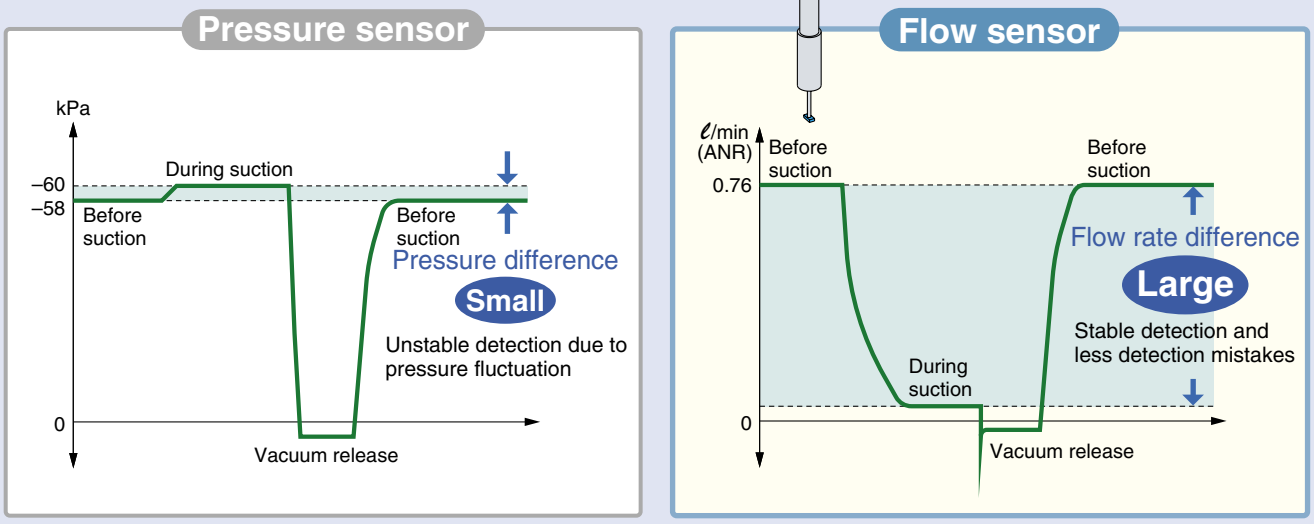

(Comparison under Nozzle diameter: ø0.3, Vacuum pressure: –60 kPa)

- Repeatability: ±**2**% F.S. or less
  The taper-shaped flow passage in front of the sensor chip enables stable sensing.
- High response speed: **5** ms or less
- Proof pressure: **500** kPa
- Grease-free
- RoHS compliant
- Flexible cable

Patent pending

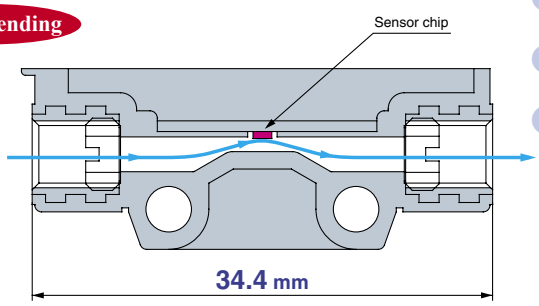

Model		Rated flow range (ℓ/min (ANR))								
		–3	–2	–1	–0.5	0	0.5	1	2	3
PFMV	505									
	510									
	530									
	505F									
	510F									
	530F									

Sensor
Series PFMV5

Voltage Monitor
Series PFMV3

Series PFMV

SMC

CAT.EUS100-67A-UK

Sensor

Reduced piping space

Mountable in a space-saving location since straight piping length is not required.

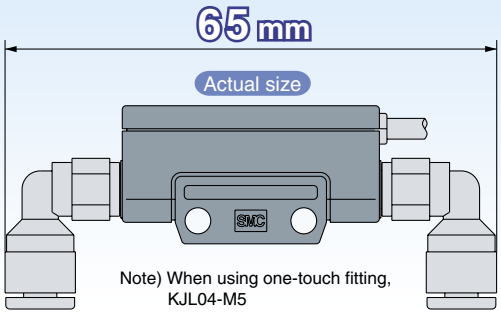

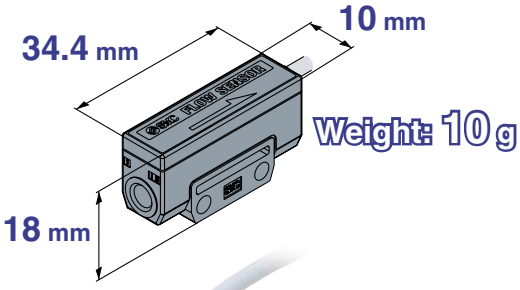

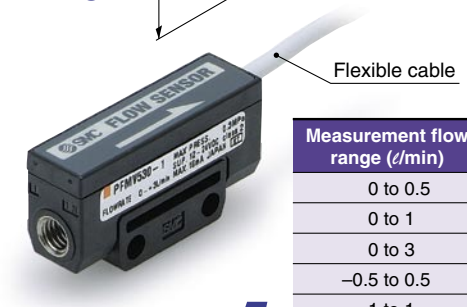

Series ***PFMV5***

Measurement flow range (ℓ/min)	Model
0 to 0.5	PFMV505
0 to 1	PFMV510
0 to 3	PFMV530
–0.5 to 0.5	PFMV505F
–1 to 1	PFMV510F
–3 to 3	PFMV530F

Voltage Monitor

A full range of sensors can be covered by one monitor

No need to select the range of connected sensors (excluding external input).

Voltage display

Output voltage of the sensor is displayed.

- Settable range: 0.7 to 5.10 V
- Minimum unit setting: 0.01 V

Series ***PFMV3***

Connectors

Easy wiring connection and removal

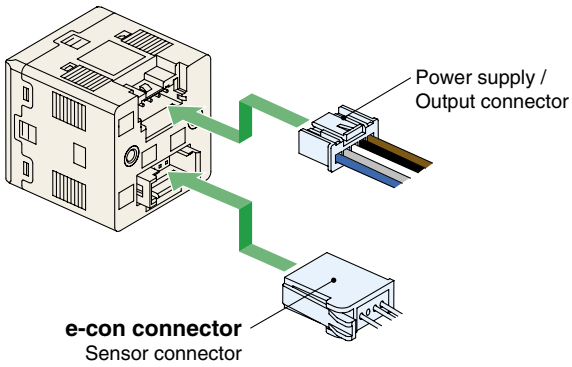

Applications

Suction confirmation of very small workpieces

- **Suction of small components can be confirmed.**
- **Highly applicable to small nozzles.**
- **Detects clogged and crushed nozzles.**

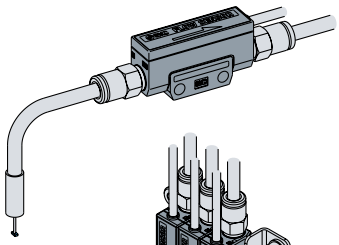

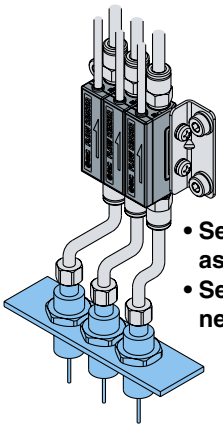

- **Sensors can be mounted as a manifold.**
- **Sensors can be mounted near pads.**

Easy leakage detection

- **Easily detects pin halls on molded parts.**

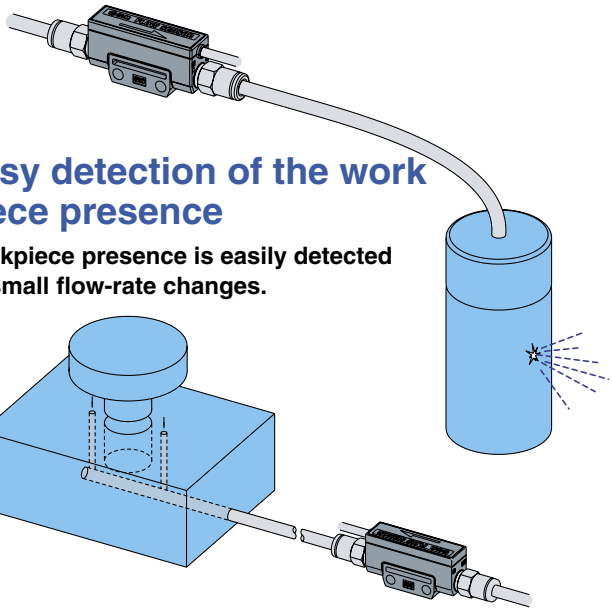

Easy detection of the work piece presence

- **Workpiece presence is easily detected by small flow-rate changes.**

Mountings

- Direct mounting

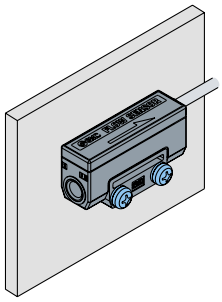

- Manifold mounting

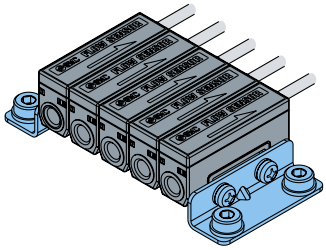

- One-side bracket mounting

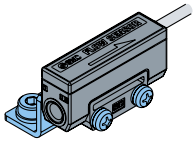

- Both-side bracket mounting

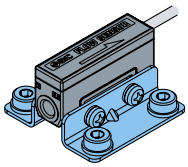

- Panel mounting

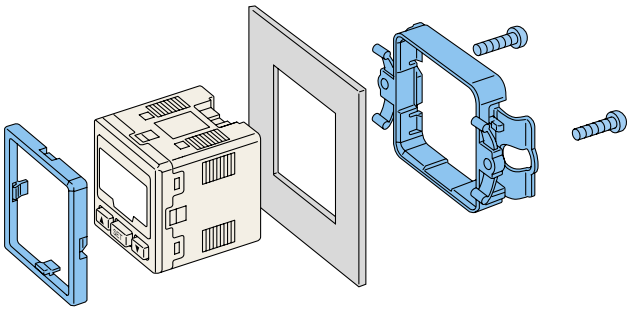

- Bracket mounting

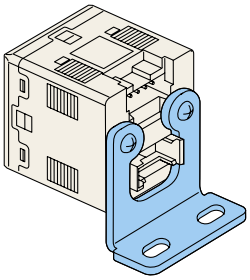

Support for vertical and horizontal secure mounting

- A single panel opening is enough.
- Reduces panel fitting work and enables space-savings.

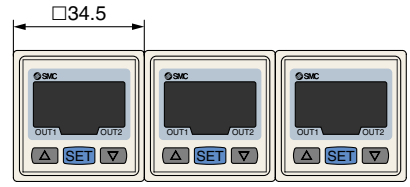

Panel opening

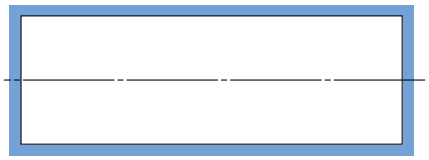

CAT.EUS100-63B-UK

Related Products Variations

Integrated type	Remote type	
		

Measurement flow range (ℓ/min)	Model	Model	
		Sensor unit	Display unit
0.2 to 10 (0.2 to 5)	PFM710	PFM510	PFM3□□
0.5 to 25 (0.5 to 12.5)	PFM725	PFM525	
1 to 50 (1 to 25)	PFM750	PFM550	
2 to 100 (2 to 50)	PFM711	PFM511	

( ): Fluid: CO_2

Model Selection

Nozzle Diameter and Flow Characteristics (Approximate values)

Use the following graphs as a reference to select sensor measuring range.

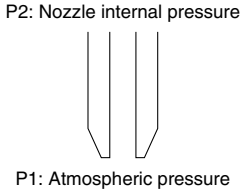

Nozzle Diameter – Flow Characteristics (Vacuum)

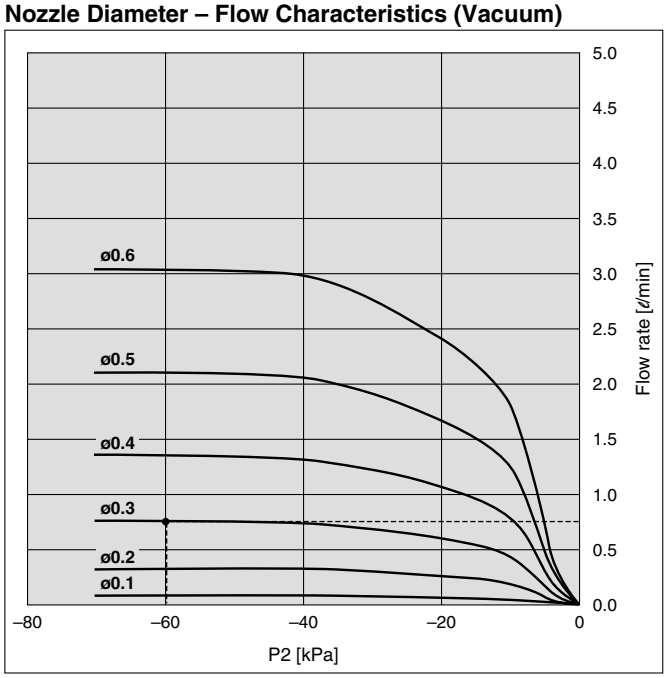

Nozzle Diameter – Flow Characteristics (Positive pressure)

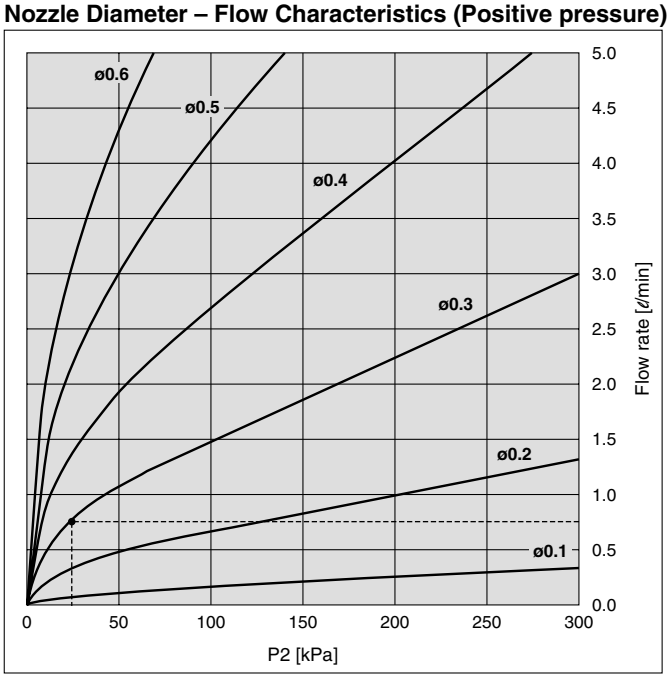

Example (Vacuum)

Selecting conditions:

Nozzle diameter: ø0.3 P1: 0 [kPa]
P2: –60 [kPa]

The flow rate will be 0.7 to 0.8 [ℓ/min] based on the graph.
→ Select the PFMV510-1.

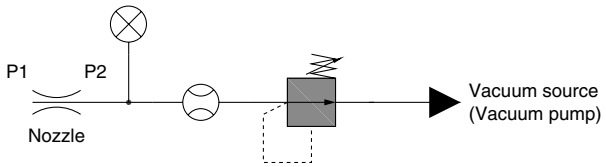

Example (Positive pressure)

Selecting conditions:

Nozzle diameter: ø0.3 P1: 0 [kPa]
P2: 20 [kPa]

The flow rate will be 0.7 to 0.8 [ℓ/min] based on the graph.
→ Select the PFMV510-1.

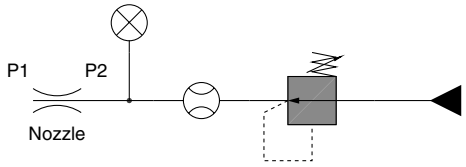

Note) Since the calculated value may not meet the approximate value due to leakage and pressure loss in the piping system, please check the result by using actual equipment.

Flow Sensor
Series PFMV5

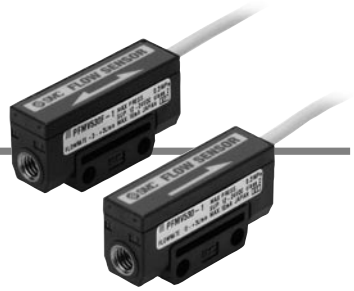

How to Order

PFMV5 05 – 1 – □ □

Measurement flow range

05	0.0 to 0.5 ℓ/min
10	0.0 to 1.0 ℓ/min
30	0.0 to 3.0 ℓ/min
05F	–0.5 to 0.5 ℓ/min
10F	–1.0 to 1.0 ℓ/min
30F	–3.0 to 3.0 ℓ/min

Output specification

1	Analogue output (1 to 5 V)

Option (shipped together)

Nil	None
A	With L-type bracket 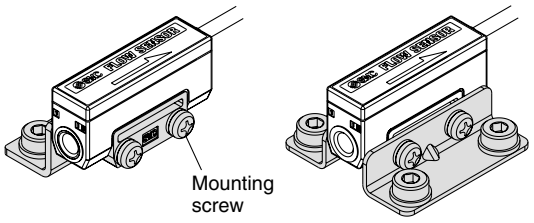

Note) 2 L-type brackets (with 2 mounting screws) are included.

Instruction manual

Nil	With instruction manual (Leaflet: Japanese and English)
N	None

Option/Part No.

If a single option or manifold mounting are required, separately order sensors with following part numbers.

Part no.	Stations	Remarks
ZS-36-A1	For 1 station (for single unit)	2 L-type brackets, 2 mounting screws M3 x 15L
ZS-36-A2	For 2 stations	2 L-type brackets, 2 mounting screws M3 x 25L
ZS-36-A3	For 3 stations	2 L-type brackets, 2 mounting screws M3 x 35L
ZS-36-A4	For 4 stations	2 L-type brackets, 2 mounting screws M3 x 45L
ZS-36-A5	For 5 stations	2 L-type brackets, 2 mounting screws M3 x 55L

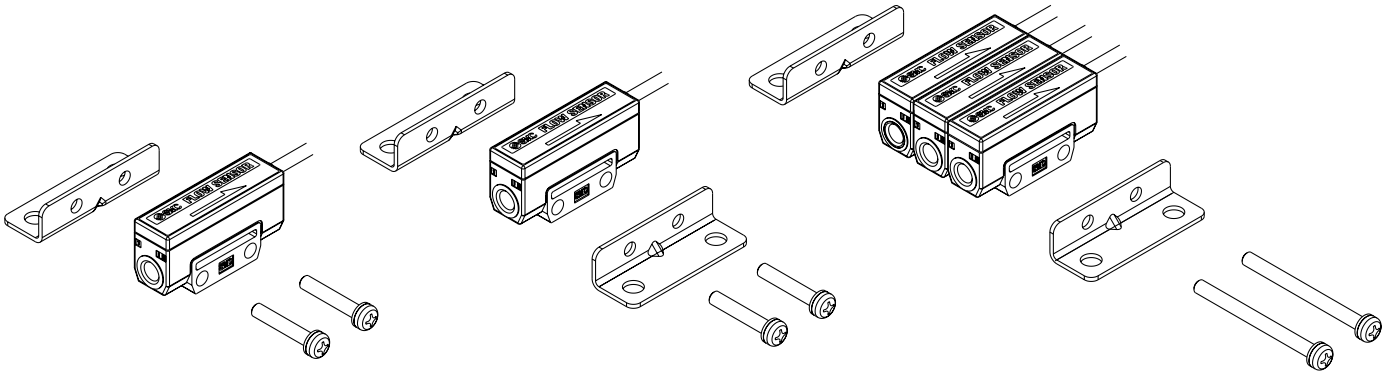

Specifications

Model		PFMV505	PFMV510	PFMV530	PFMV505F	PFMV510F	PFMV530F
Applicable fluid		Dry air, N_2 (ISO 8573-1 1.1.2 to 1.1.6: 2001)					
Rated flow range (Flow rate range) Note 1)		0 to 0.5 ℓ/min	0 to 1 ℓ/min	0 to 3 ℓ/min	–0.5 to 0.5 ℓ/min Note 2)	–1 to 1 ℓ/min Note 2)	–3 to 3 ℓ/min Note 2)
Repeatability		±2 F.S. or less Note 3)					
Pressure characteristics (Based on 0 kPa Note 4))		±2% F.S. or less (0 to 300 kPa) ±5% F.S. or less (–70 to 0 kPa)					
Temperature characteristics (Based on 25°C)		±2% F.S. or less (15 to 35°C) ±5% F.S. or less (0 to 50°C)					
Rated pressure range Note 5)		–70 kPa to 300 kPa					
Operating pressure range Note 6)		–100 kPa to 400 kPa					
Proof pressure		500 kPa					
Analogue output (Non-linear output)		Output voltage: 1 to 5 V; output impedance: approx. 1 kΩ					
Response time		5 ms or less (90% response)					
Power supply voltage		12 to 24 VDC ± 10%, Ripple (p-p) ± 10% or less (with polarity protection)					
Current consumption		16 mA or less					
Environ-mental resistance	**Enclosure**	IP40					
	Fluid temperature	0 to 50°C (with no freezing nor condensation)					
	Operating temperature range	0 to 50°C (with no freezing nor condensation)					
	Stored temperature range	–10 to 60°C (with no freezing nor condensation)					
	Operating humidity range	35 to 85% R.H. (with no condensation)					
	Stored humidity range	35 to 85% R.H. (with no condensation)					
	Withstand voltage	1000 VAC for 1 min. between whole charging part and case					
	Insulation resistance	50 MΩ or more (500 VDC Mega) between whole charging part and case					
	Vibration resistance	10 to 150 Hz with a 1.5 mm amplitude, max. 98 m/s², in each X, Y, Z direction for 2 hrs (de-energised)					
	Impact resistance	980 m/s² in X, Y, Z directions 3 times each (de-energised)					
	Port size	M5 x 0.8 (Lightening torque: 1 to 1.5 N·m)					
	Wetted parts material	PPS, Si, Au, Stainless steel 316, C3604 (electroless nickel plated)					
Lead wire		Vinyl cabtire cord, 3 cores ø2.6, 0.15 mm², 2 m					
Weight		10 g (excluding lead wire)					

Note 1) Volume flow converted value under standard conditions (ANR) of 20°C, 101.3 kPa and 65% RH.
Note 2) Analogue output indicates 3 V when the flow rate is 0. When the flow direction is from IN to OUT, the output is changed to 5 V, and when it's from OUT to IN, the output is changed to 1 V.
Note 3) The unit % F.S. is based on the full scale of analogue 4 V (1-5 V).
Note 4) 0 kPa indicates the atmospheric release.
Note 5) Pressure range that satisfies the product specifications.
Note 6) Applicable pressure range.

Internal Circuits and Wiring Examples

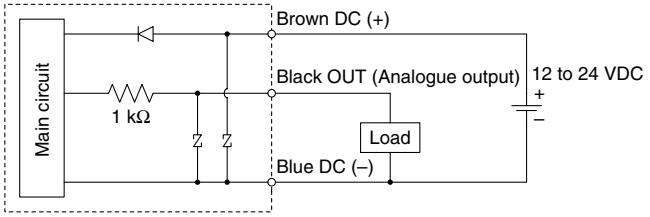

Lead Wire Specifications

Rated temperature		80°C
Rated voltage		1000 V
Number of wires		3
Conductor	**Material**	Copper alloy wire
	Construction	7/11/0.05 mm
	External diameter	0.58 mm
Insulator	**Material**	Cross-linked vinyl chloride (XL-PVC)
	External diameter	0.88 mm
	Standard thickness	0.15 mm
	Colours	Brown, Blue, Black
Sheath	**Material**	Oil-resistant/Heat resistant vinyl
	Standard thickness	0.35 mm
	Colour	Light grey (Munsell N7 equivalent)
Finished external diameter		$2.6^{+0.1}_{-0.15}$

Recommended Pneumatic Circuits

Compressed air line

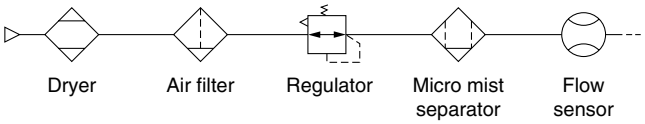

Dryer	Air filter	Regulator	Micro mist separator	Flow sensor
IDF IDU	**AF**	**AR IR**	**AMD AFD**	**PFMV**

Vacuum line

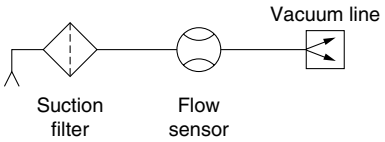

Recommended Fittings

One-touch Fitting / Series KQ2

Type	Tubing O.D. (mm)	Port size	Model
Male connector	4	M5 x 0.8	KQ2H04-M5
Hex. socket head male connector			KQ2S04-M5
Male elbow			KQ2L04-M5

One-touch Mini / Series KJ

Type	Tubing O.D. (mm)	Port size	Model
Male connector	4	M5 x 0.8	KJH04-M5
Hex. socket head male connector			KJS04-M5
Male elbow			KJL04-M5

Miniature Fitting / Series M

Type	Tubing O.D. (mm)	Port size	Model
Barb fitting for nylon tube	4	M5 x 0.8	M-5AN-4
	6		M-5AN-6

Internal Construction

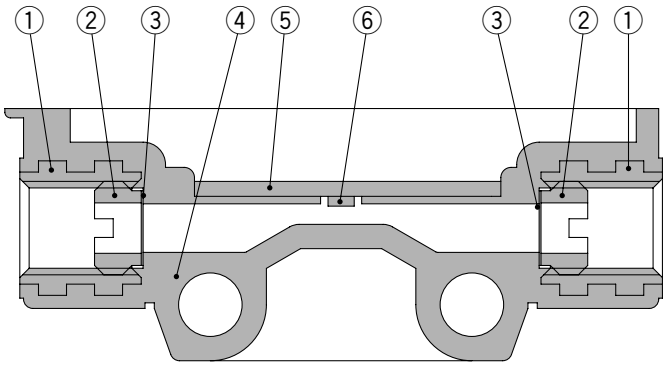

Component Parts

No.	Description	Material
1	**Fitting for piping**	C3604 (Electroless nickel plated)
2	**Mesh holding screw**	
3	**Mesh**	Stainless steel 316
4	**Body**	PPS
5	**Print circuit board**	GE4F
6	**Sensor chip**	Si, Au

Detection Principle

This MEMS sensor chip consists of an upstream temperature measuring sensor (Ru) and a downstream temperature measuring sensor (Rd), which are symmetrically placed from the center of a platinum coated thin film heater (Rh) mounted on a membrane, and an ambient temperature sensor (Ra) for measuring gas temperature.
The principle is as shown in the diagram on the right. (a) When the gas is static, the temperature distribution of heated gas centered around Rh is uniform, and Ru and Rd have the same resistance. (b) When the gas flows from the left side, it upsets the balance of the temperature distribution of heated gas, and the resistance of Rd becomes greater than that of Ru.
The difference in resistance between Ru and Rd is proportional to the gas velocity, so measurement and analysis of the resistance can show the flow direction and velocity of the gas.
Ra is used to compensate the gas and/or ambient temperature.

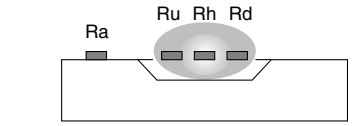

(a) The gas is static.

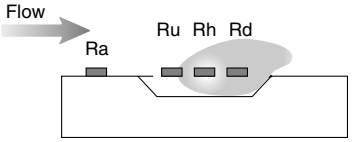

(b) The gas flows from the left side.

Analogue Output (Non-linear output)

PFMV505-1

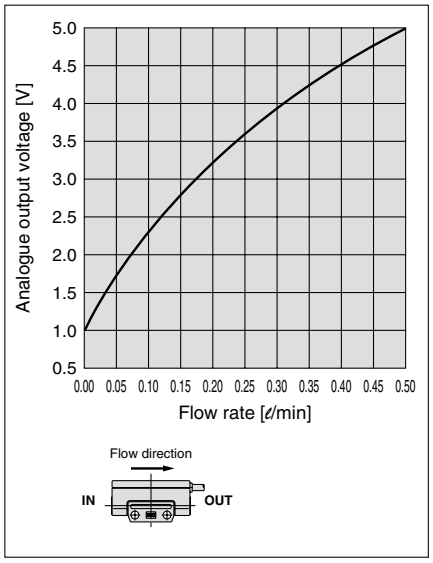

PFMV510-1

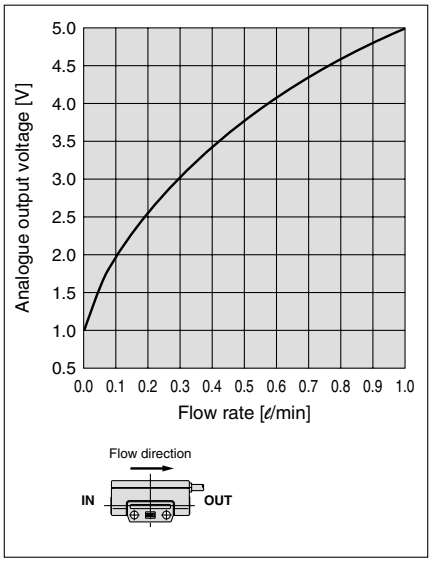

PFMV530-1

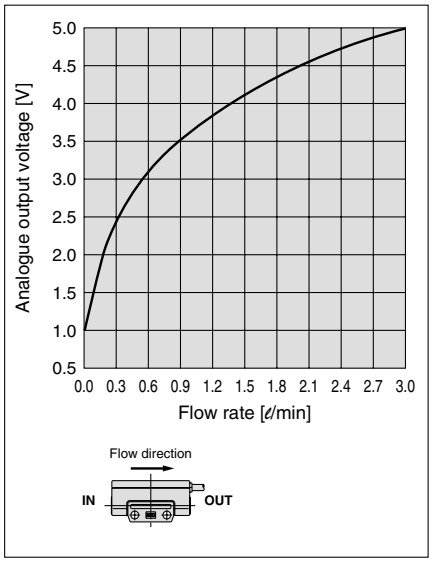

PFMV505F-1

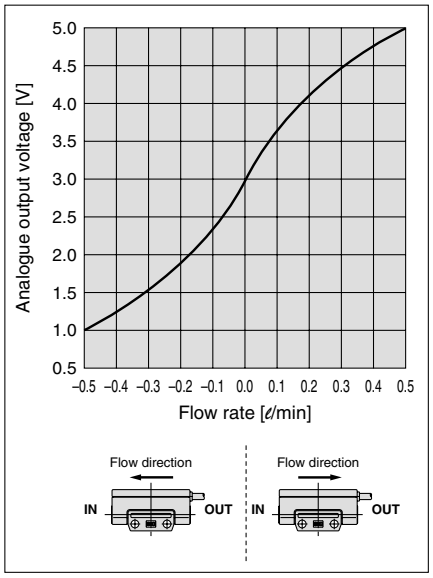

PFMV510F-1

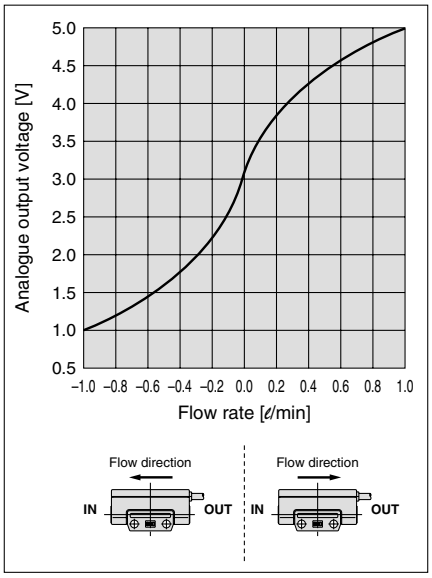

PFMV530F-1

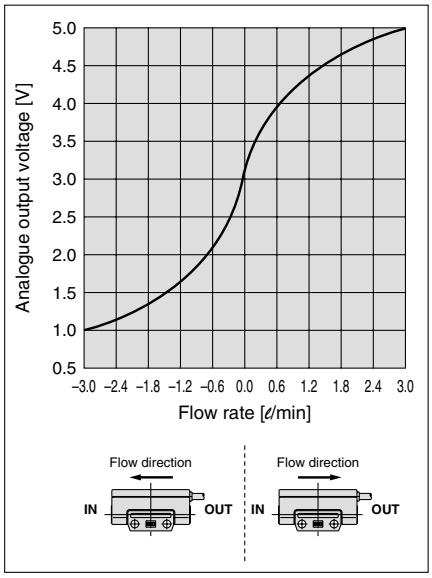

Pressure Loss

PFMV505(F)-1

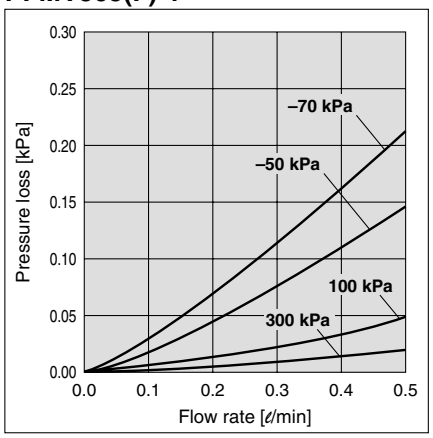

PFMV510(F)-1

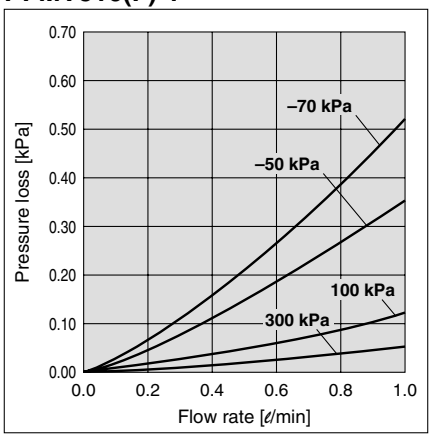

PFMV530(F)-1

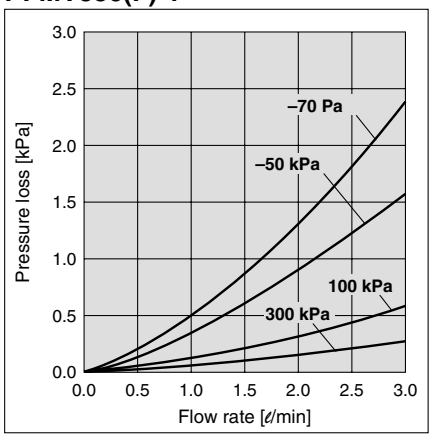

Dimensions

PFMV5□□-1
PFMV5□□F-1

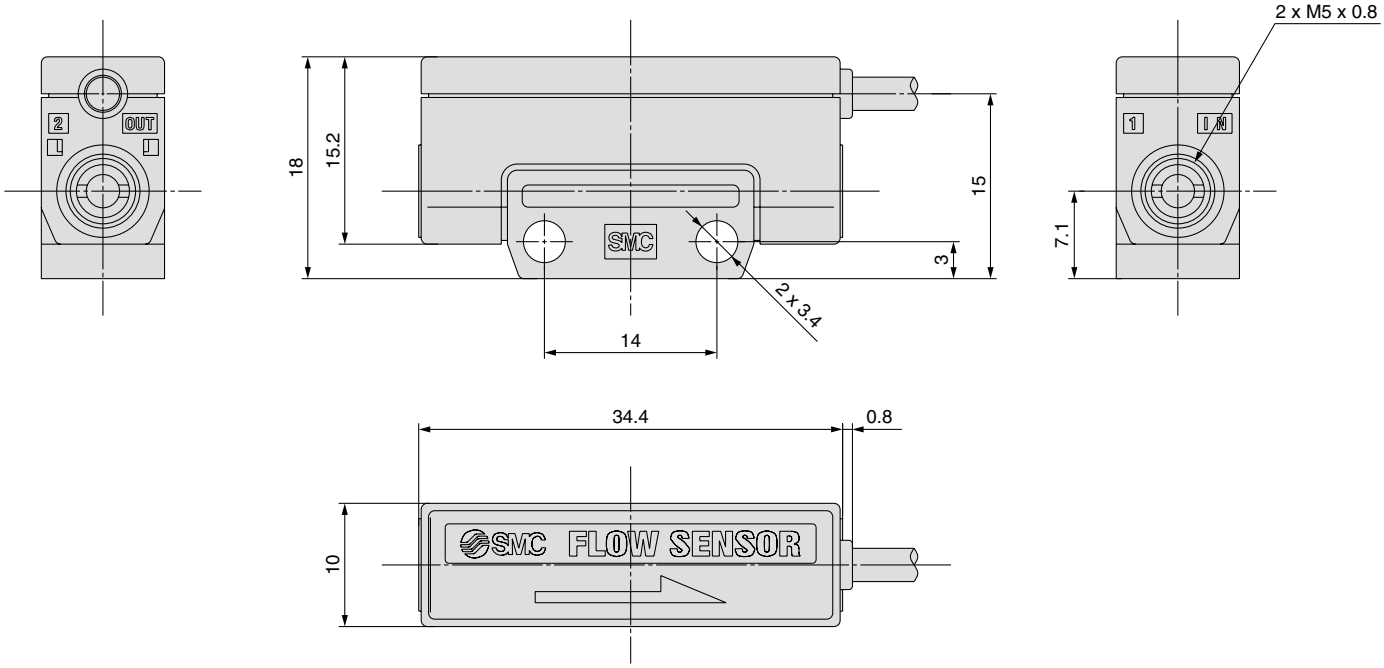

One-side bracket

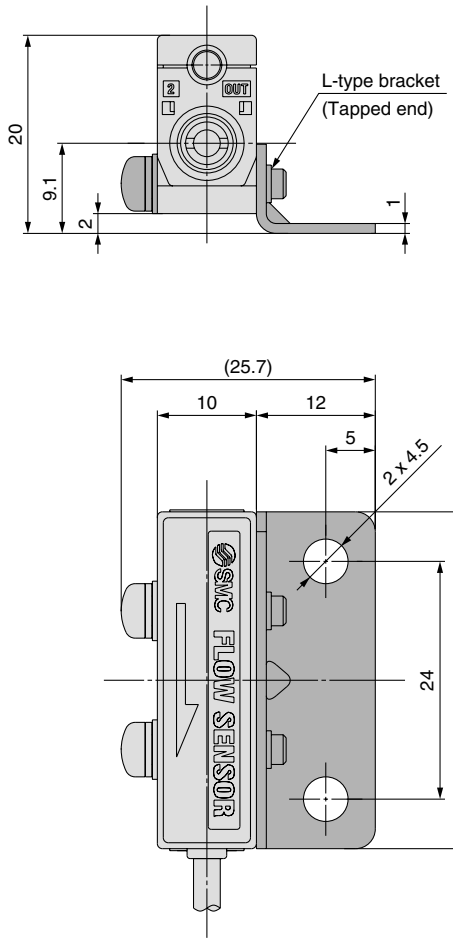

Both-side bracket

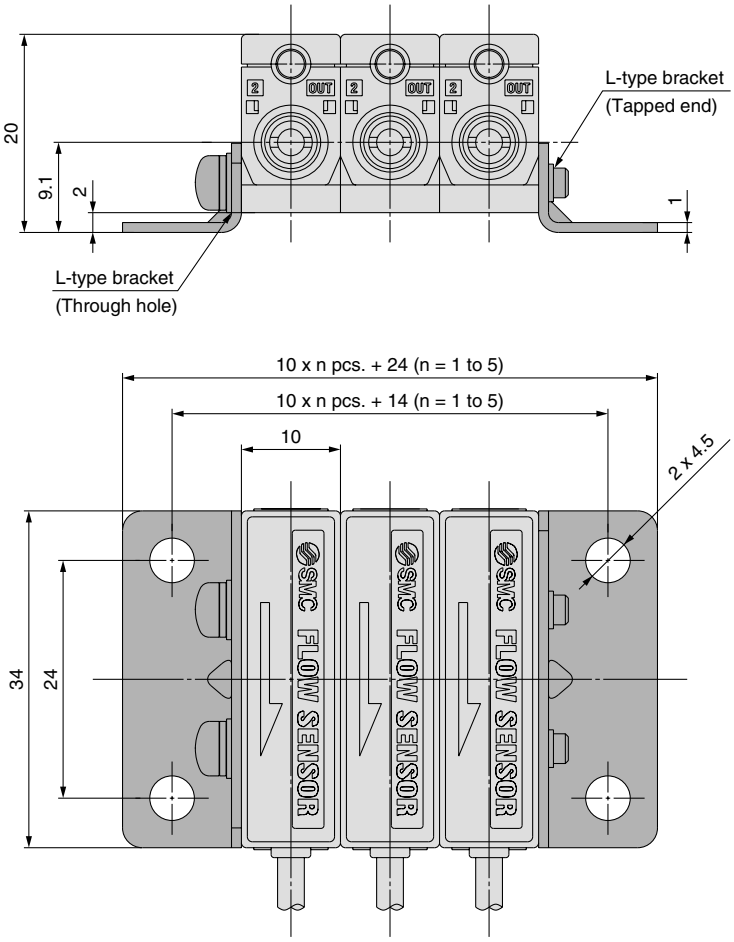

Above dimensions correspond to PFMV5□□-1. PFMV5□□F-1 has same dimensions.

Voltage Monitor for PFMV5

Series PFMV3

How to Order

Instruction manual

Nil	With instruction manual (Leaflet: Japanese and English)
N	None

Calibration certificate

Nil	None
A	With calibration certificate

Note) The certificate is available in both English and Japanese. Please consult SMC for other languages.

PFMV3 0 0 – M L □ □ – □ □

Type

3	Remote display unit

Input specification

Symbol	Content	Applicable remote type sensor unit
0	Voltage input	PFMV5□(F)-1-□□

Output specification

0	2 NPN outputs + 1 to 5 V output
1	2 NPN outputs + 4 to 20 mA output
2	2 NPN outputs + Auto-shift input
3	2 PNP outputs + 1 to 5 V output
4	2 PNP outputs + 4 to 20 mA output
5	2 PNP outputs + Auto-shift input

Option 1

Nil	None
L	Power supply / Output connector

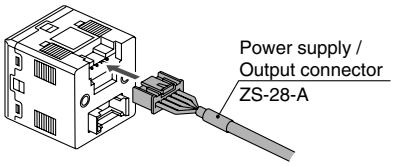

Note) Cable is shipped together, but not connected.

Option 3

Nil	None
G	With sensor connector

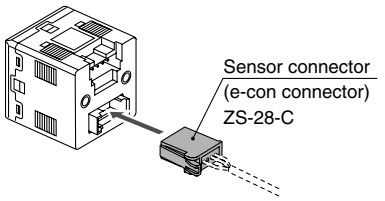

Note) Connector is shipped together, but not connected.

Option 2

Nil	None
E	Bracket
B	Panel mount adapter
D	Panel mount adapter + front protective cover

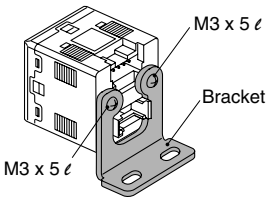

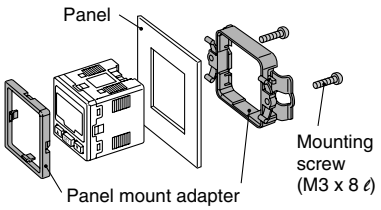

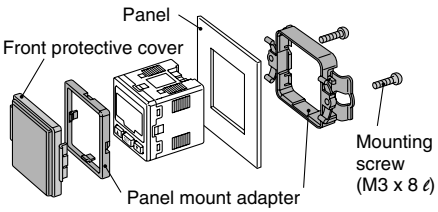

Note) Options are shipped together, but not assembled.

PFMV3 series is a monitor that displays the PFMV5 series output voltage.

Option/Part No.

Description	Part no.	Note
Power supply / Output connector (2 m)	ZS-28-A	
Bracket	ZS-28-B	With M3 x 5 ℓ (2 pcs.)
Sensor connector	ZS-28-C	1 pc.
Panel mount adapter	ZS-27-C	With M3 x 8 ℓ (2 pcs.)
Panel mount adapter + front protective cover	ZS-27-D	With M3 x 8 ℓ (2 pcs.)

Specifications

Model	Series PFMV3□□
Applicable sensor	Series PFMV505(F), PFMV510(F), PFMV530(F)
Displayable range	0.70 to 5.10 V: The voltage under 0.7 V is displayed as “LLL” and that of 5.1 V or more is displayed as “HHH”.
Settable range	0.70 to 5.10 V
Minimum unit setting	0.01 V
Indication unit	V
Power supply voltage	12 to 24 VDC (Ripple ± 10% or less) (with polarity protection)
Current consumption	50 mA or less
Hysteresis Note 1)	Hysteresis mode: Variable, Window comparator mode: Variable
Switch output	NPN or PNP open collector output: 2 outputs Max. load current: 80 mA; max. load voltage 30 VDC (at NPN output), Residual voltage 1 V or less (at load current 80 mA), with short-circuit protection
Response time	Switch output: 2 ms (10 ms, 50 ms, 0.5 s, 1 s can be selected.) Note 2)
Repeatability	±0.1% F.S. or less, analogue output accuracy: ±0.3% F.S. or less
Analogue output	Output voltage: 1 to 5 VDC; output impedance: approx. 1 kΩ Output current: 4 to 20 mADC; max. load impedance: 600 Ω (at 24 VDC) Min. load impedance: 50 Ω; accuracy: ±1% F.S. or less (relative to display value); response: 0.1 s (90% response or less)
Display accuracy	±0.5% F.S. ± 1 digit or less
Display method	3+1/2-digit, 7-segment LED 2-color display (Red/Green) Updated cycle: 10 times/sec
Status LEDs	OUT1: Illuminates when output is turned ON (Green). OUT2: Illuminates when output is turned ON (Red).
External input (Auto-shift input) Note 3)	No-voltage input (Reed or Solid state), LOW level input 5 msec or more, LOW level 0.4 V or less
Enclosure	IP40
Operating temperature range	Operating: 0 to 50°C; stored: –10 to 60°C (with no freezing nor condensation)
Operating humidity range	Operating and stored: 35 to 85% R.H. (with no condensation)
Withstand voltage	1000 VAC for 1 min. between whole charging part and live part
Insulation resistance	50 MΩ or more (500 VDC Mega) between whole charging part and live part
Vibration resistance	10 to 150 Hz with a 1.5 mm amplitude or 98 m/s^2 acceleration, in each X, Y, Z direction for 2 hrs, whichever is smaller (de-energised)
Impact resistance	100 m/s^2 in X, Y, Z directions 3 times each (De-energised)
Temperature characteristics	±0.5% F.S. or less (based on 25°C)
Connection	Power supply / Output connection: 5P connector, Sensor connection: 4P connector (for cable specifications, refer to page 12.)
Material	Front and rear cases: PBT
Weight	30 g (without cable); 85 g (with cable)

Note 1) Set to hysteresis mode at the time of shipment from the factory. Can be changed to window comparator mode using push-buttons.
Note 2) This is the response when the setting value is set to 90% to a 0 to 100% of step input.
Note 3) Auto-shift function is turned OFF at the time of shipment from the factory. Use it after auto-shift function is turned ON using push-buttons.

Analogue Output

1 to 5 VDC

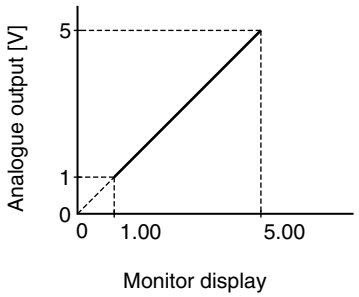

4 to 20 mADC

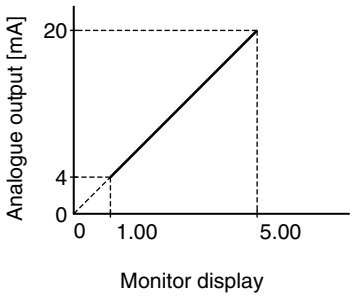

Internal Circuits

PFMV300
NPN open collector output: 2 outputs
Max. 30 V, 80 mA, residual voltage 1 V or less
Analogue output: 1 to 5 V
Output impedance: Approx. 1 kΩ

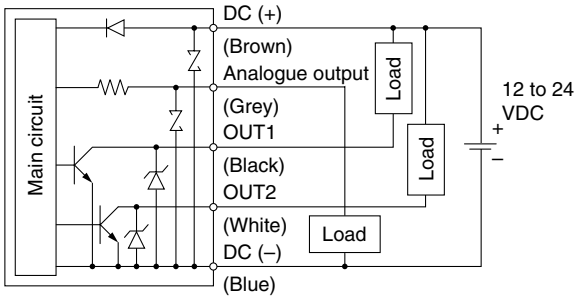

PFMV303
PNP open collector output: 2 outputs
Max. 80 mA, residual voltage 1 V or less
Analogue output: 1 to 5 V
Output impedance: Approx. 1 kΩ

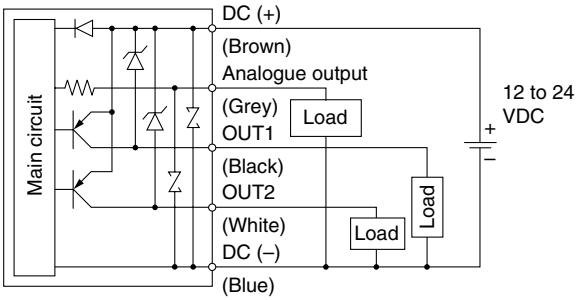

PFMV301
NPN open collector output: 2 outputs
Max. 30 V, 80 mA, residual voltage 1 V or less
Analogue output: 4 to 20 mA
Max. load impedance: 300 Ω (at 12 VDC) 600 Ω (at 24 VDC)
Min. load impedance: 50 Ω

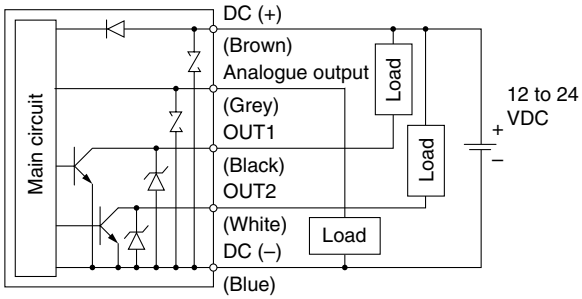

PFMV304
PNP open collector output: 2 outputs
Max. 80 mA, residual voltage 1 V or less
Analogue output: 4 to 20 mA
Max. load impedance: 300 Ω (at 12 VDC) 600 Ω (at 24 VDC)
Min. load impedance: 50 Ω

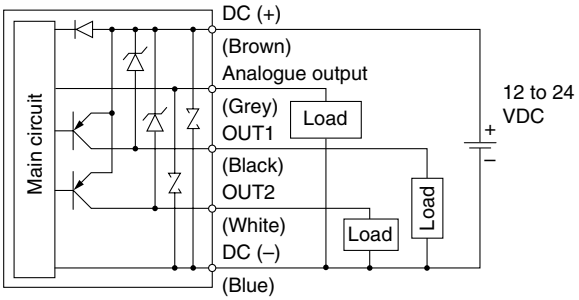

PFMV302
NPN open collector output with auto-shift input: 2 outputs
Max. 30 V, 80 mA, residual voltage 1 V or less

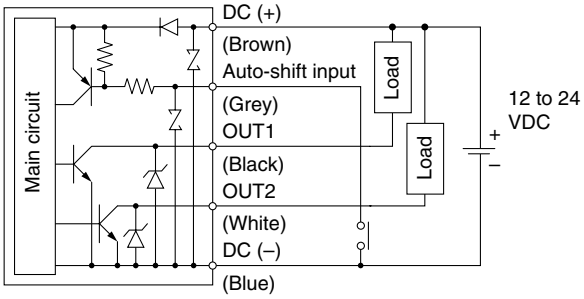

PFMV305
PNP open collector output with auto-shift input: 2 outputs
Max. 80 mA, residual voltage 1 V or less

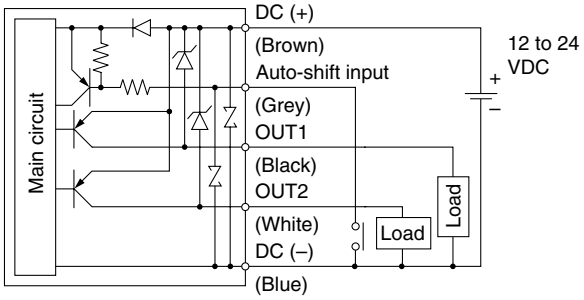

Descriptions

LCD Display

Shows the current voltage, mode setting, and error code. Four display modes are available, some of which use fixed indications in either red or green, and others use indications that change from green to red.

Output (OUT1) Indicator (Green)

Lights when the output (OUT1) is turned on.

△ Button

Used for mode selection and increasing the ON/OFF setting value. Also used to switch to peak display mode.

Output (OUT2) Indicator (Red)

Lights when the output (OUT2) is turned on.

SET Button

Used to activate mode changes and new setting values.

▽ Button

Used for mode selection and decreasing the on/off setting value. Also used to switch to bottom display mode.

Dimensions

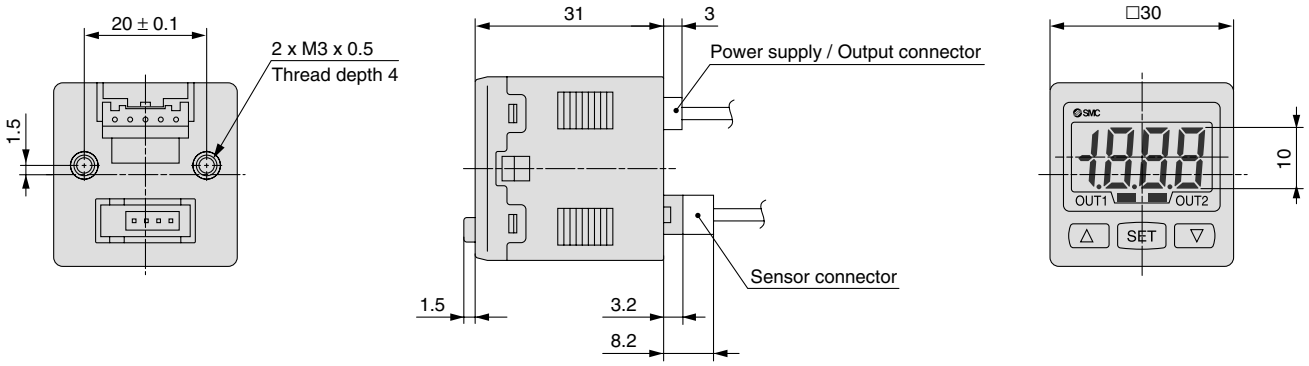

Sensor connector (ZS-28-C)

Pin no.	Terminal name
1	DC (+)
2	N.C.
3	DC (–)
4	IN

Note) 1 to 5 V (Sensor output)

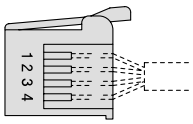

With bracket

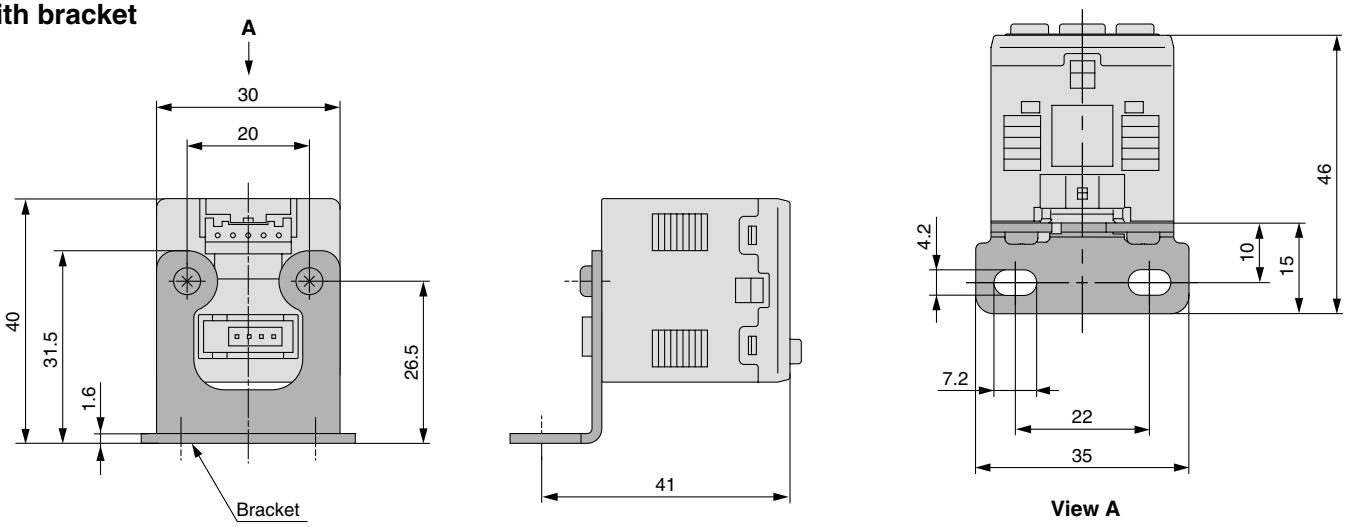

With panel mount adapter

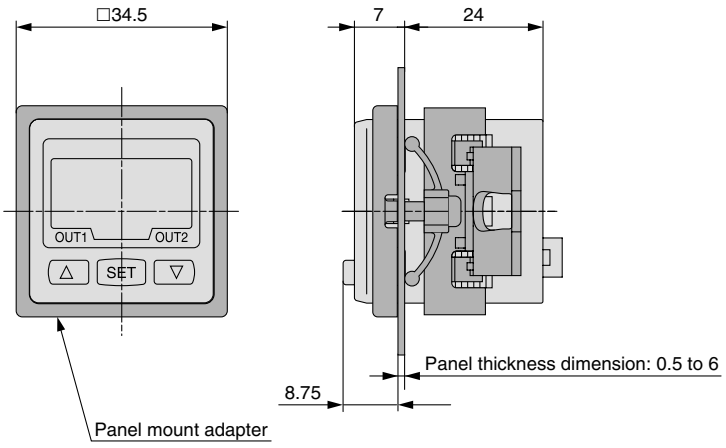

With panel mount adapter + front protective cover

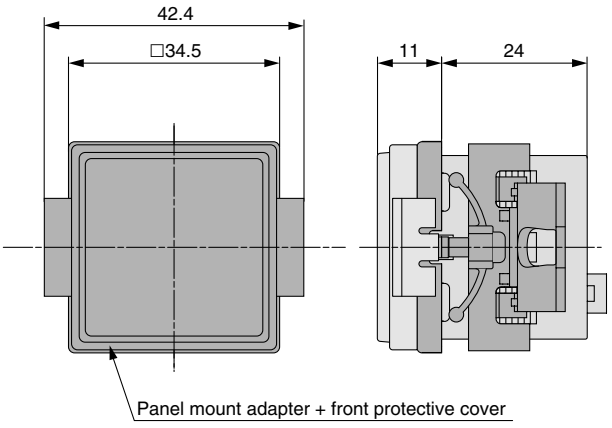

Dimensions

Panel fitting dimensions

Secure mounting of n pcs. (2 or more) switches (Horizontal)

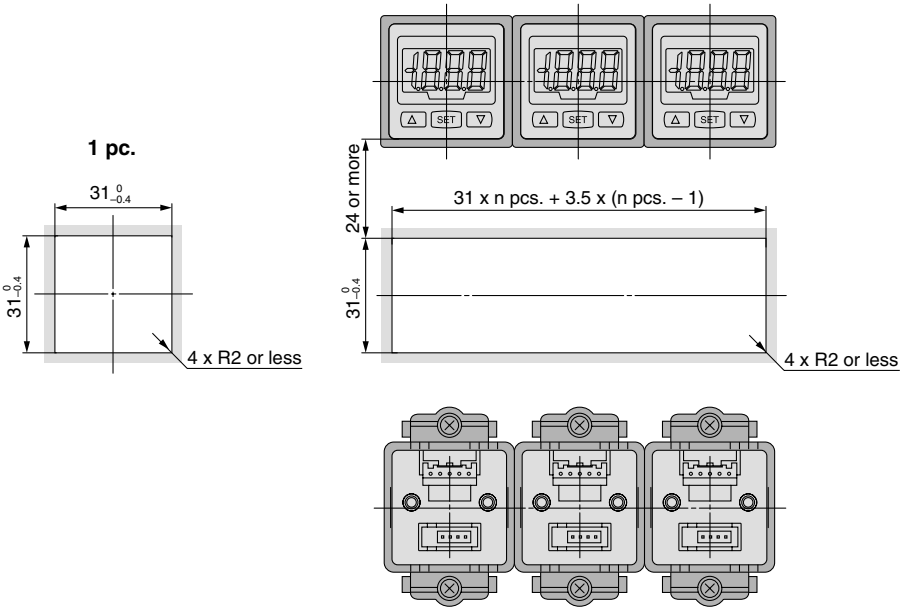

Secure mounting of n pcs. (2 or more) switches (Vertical)

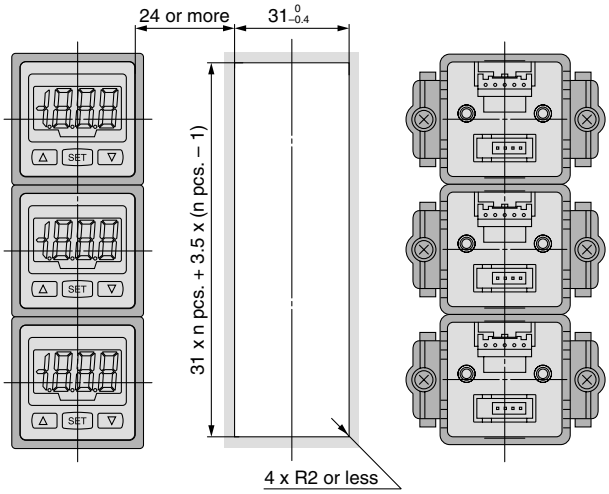

Note) If a bend (R) is used, limit it to R2 or less.

Power supply / Output connector (ZS-28-A)

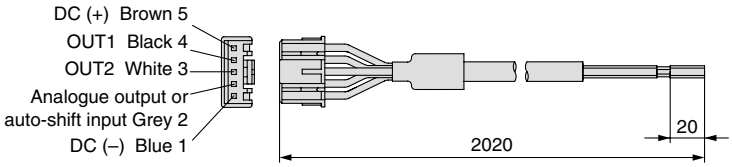

Cable Specifications

Rated temperature		105°C
Rated voltage		300 V
Number of wires		5
Con-ductor	**Nominal cross section area**	0.2 mm^2
	Material	Soft copper wire
	Construction	40 pcs. / 0.08 mm
	External diameter	0.58 mm
Insula-tor	**Material**	Cross-linked vinyl chloride resin compound
	External diameter	Approx. 1.12 mm
	Standard thickness	0.27 mm
	Colours	Brown, Black, White, Grey, Blue
Sheath	**Material**	Oil-resistant vinyl chloride resin compound
	Standard thickness	0.5 mm
	Colour	Light grey (Munsell N7)
Finished external diameter		ø4.1

Function Details

■ Output operation

The output operation can be selected from the following:
Output corresponding to receiving voltage (hysteresis mode and window comparator mode).
At the time of shipment from the factory, it is set to hysteresis mode and reverse output.

■ Displayed values

The monitor receives the output voltage of the connected sensor and displays the received voltage. The unit is [V] and the voltage is displayed at 0.01 V intervals.
However, the voltage under 0.70 V is displayed as “LLL” and the voltage over 5.1 V is displayed as “HHH”.
Since the voltage is displayed on the monitor, it doesn’t rely on the sensor range.

■ Indication colour

The indication colour can be selected for each output condition. The selection of the indication colour provides visual identification of abnormal values. (The indication colour depends on OUT1 setting.)

Green for ON, Red for OFF
Red for ON, Green for OFF
Red all the time
Green all the time

■ Setting of response time

The flow rate may change momentarily during transition between ON (open) and OFF (closed) of the valve. It can be set so that this momentary change is not detected.

2 ms
10 ms
50 ms
0.5 s
1 s

■ Auto-shift function

If the supply pressure of the air source fluctuates, the flow rate of vacuum generators such as an ejector also fluctuates. In that case, the switch may not operate properly when checking absorption. Auto-shift is a function that corrects this fluctuation.
This function sends the output corresponding to the relative change based on the flow rate when the auto shift signal is input.
Set value = 0.50: the switch turns ON and OFF when the set value increases by 0.5 V from the reference value.
Set value = –0.50: the switch turns ON and OFF when the set value decreases by 0.5 V from the reference value.
The reference value shows the voltage (= flow rate) when the auto-shift signal is input.

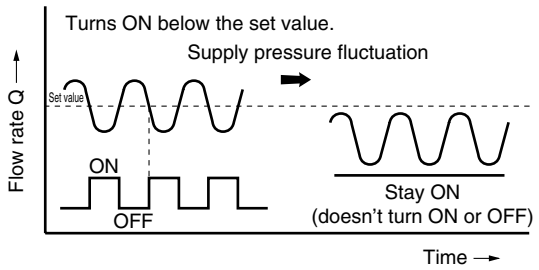

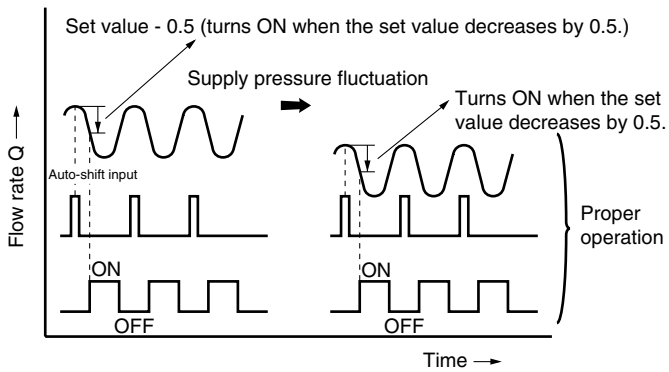

■ Auto-preset function

This is a function that calculates the set value automatically.
When predetermined operation is conducted while the sensor is connected, the set value is calculated and decided automatically by changing the flow rate. (Fine adjustment is available.)

■ Selection of power-saving mode

The power-saving mode can be selected.
With this function, if no buttons are pressed for 30 sec., it shifts to power-saving mode.
At the time of shipment from the factory, the product is set to the normal mode (the power-saving mode is turned off).
(When power-saving mode is activated, the decimal point flashes.)

■ Setting of secret code

The user can select whether a secret code must be entered to release key lock.
At the time of shipment from the factory, it is set such that the secret code is not required.

■ Peak / Bottom value indication

The maximum (minimum) voltage is detected and updated from when the power supply is turned on. In peak (bottom) value indication mode, this maximum (minimum) voltage is displayed.

■ Keylock function

Prevents operation errors such as accidentally changing setting values.

■ Error indication function

When an error or abnormality arises, the location and contents are displayed.

Description	Contents	Action
Input voltage error	Input voltage is outside the applicable indication range.	Check the input voltage.
System error	Possibility of internal circuit damage before factory adjustment.	Stop operation immediately and contact SMC.
	System error. Possibility of data memorizing failure or internal circuit damage.	Reset the unit, and carry out all settings again.

If the error or abnormality cannot be solved by the action above, please contact SMC for further investigation.

■ Reference value correcting function

If the displayed value doesn’t become 1.00 due to the difference of the analogue output of the connected sensors PFMV505, 510 and 530, the reference value will compulsively be set to 1.00.
When sensors PFMV505F, 510F and 530F are connected, the reference value will compulsively be set to 3.00.
Press the [△] and [▽] buttons simultaneously for 1 second or more when the flow rate is zero (the display flashes when successfully corrected).
The effective range of the correcting function is from 1.00 ± 0.2 V to 3.00 ± 0.2 V. If the monitor is operated outside this range, it displays “Er4” and the reference value won’t be corrected. Be sure to operate the monitor when the flow rate is zero.
When the PFM505 is used and the flow rate is applied, please pay attention to the following point: if this correcting function is applied around 3.00 V, the reference value will be changed and the function won’t work properly. If the monitor is improperly operated, return the flow rate to zero and operate the monitor again.

Series PFMV
Safety Instructions

These safety instructions are intended to prevent a hazardous situation and/or equipment damage. These instructions indicate the level of potential hazard by labels of **"Caution", "Warning"** or **"Danger"**. To ensure safety, be sure to observe ISO 4414 Note 1), JIS B 8370 Note 2) and other safety practices.

■ Explanation of the Labels

Labels	Explanation of the labels
⚠ **Danger**	In extreme conditions, there is a possible result of serious injury or loss of life.
⚠ **Warning**	Operator error could result in serious injury or loss of life.
⚠ **Caution**	Operator error could result in injury Note 3) or equipment damage. Note 4)

Note 1) ISO 4414: Pneumatic fluid power – General rules relating to systems.
Note 2) JIS B 8370: General Rules for Pneumatic Equipment.
Note 3) Injury indicates light wounds, burns and electrical shocks that do not require hospitalization or hospital visits for long-term medical treatment.
Note 4) Equipment damage refers to extensive damage to the equipment and surrounding devices.

■ Selection/Handling/Applications

1. **The compatibility of the pneumatic equipment is the responsibility of the person who designs the pneumatic system or decides its specifications.**
   Since the products specified here are used in various operating conditions, their compatibility for the specific pneumatic system must be based on specifications or post analysis and/or tests to meet the specific requirements. The expected performance and safety assurance are the responsibility of the person who has determined the compatibility of the system. This person should continuously review the suitability of all items specified, referring to the latest catalog information with a view to giving due consideration to any possibility of equipment failure when configuring a system.
2. **Only trained personnel should operate pneumatic machinery and equipment.**
   Compressed air can be dangerous if handled incorrectly. Assembly, handling or repair of systems using pneumatic equipment should be performed by trained and experienced operators.
3. **Do not service machinery/equipment or attempt to remove components until safety is confirmed.**
   1. Inspection and maintenance of machinery/equipment should only be performed after confirmation of safe locked-out control positions.
   2. When equipment is to be removed, confirm the safety process as mentioned above. Cut the supply pressure for this equipment and exhaust all residual compressed air in the system.
   3. Before the machinery/equipment is restarted, take measures to prevent shooting-out of cylinder piston rod, etc. (bleed air into the system gradually to create back pressure).
4. **Contact SMC if the product is to be used in any of the following conditions:**
   1. Conditions and environments beyond the given specifications, or if product is used outdoors.
   2. Installation on equipment in conjunction with atomic energy, railway, air navigation, vehicles, medical equipment, food and beverages, recreation equipment, emergency stop circuits, clutch and brake circuits in press applications, or safety equipment.
   3. An application which has the possibility of having negative effects on people or property: therefore requires special safety analysis.
   4. If the products are used in an interlock circuit, prepare a double interlock style circuit with a mechanical protection function for the prevention of a breakdown. And, examine the devices periodically if they function normally or not.

■ Exemption from Liability

1. **SMC, its officers and employees shall be exempted from liability for any loss or damage arising out of earthquakes or fire, action by a third person, accidents, customer error with or without intention, product misuse, and any other damages caused by abnormal operating conditions.**
2. **SMC, its officers and employees shall be exempted from liability for any direct or indirect loss or damage, including consequential loss or damage, loss of profits, or loss of chance, claims, demands, proceedings, costs, expenses, awards, judgments and any other liability whatsoever including legal costs and expenses, which may be suffered or incurred, whether in tort (including negligence), contract, breach of statutory duty, equity or otherwise.**
3. **SMC is exempted from liability for any damages caused by operations not contained in the catalogues and/or instruction manuals, and operations outside of the specification range.**
4. **SMC is exempted from liability for any loss or damage whatsoever caused by malfunctions of its products when combined with other devices or software.**

Series PFMV5
Specific Product Precautions 1

Be sure to read this before handling.
Refer to the back of page 1 for Safety Instructions and "Precautions for Handling Pneumatic Devices" (M-03-E3A) for Common Precautions.

■ Flow Sensor

Design and Selection

⚠ Warning

1. Operate the sensor only within the specified voltage.
Use of the sensor outside of the specified voltage range can cause not only malfunction and damage of the sensor, but also electrocution and fire.

2. Be sure to verify the applicable fluid.
The sensors do not have an explosion proof rating. To prevent possible fire hazard, do not use with flammable gases or fluids.

3. Use the sensor within the specified flow rate measurement and operating pressure.
Operating beyond the specified flow rate and operating pressure can damage the sensor.

4. Never use flammable fluids and/or permeable fluids.
They may cause fire, explosion or corrosion.
∗ Refer to the MSDS (Material Safety Data Sheet) when using chemicals.

5. Use the sensor within the specified ambient and fluid temperatures.
If the ambient or fluid temperatures exceed the specified range, the sensor can be damaged.
Even if they are in the specified range, do not use it in a place with condensation in the piping.

6. To prevent damage due to failure and/or malfunction of the product, establish a backup system such as a fail-safe system which enables multiple-stage type operation of the equipment and machinery.

7. When the product is for an interlock circuit, the following points should be noted.
- Provide double interlocking through another system (mechanical protection function, etc.).
- Perform checks to ensure the product is operating properly, as there is a risk of injury.

⚠ Caution

1. Ensure sufficient space for maintenance activities.
Provide space required for maintenance.

2. The direct-current power supply to combine should be UL authorized power supply.
(1) Limited voltage current circuit in accordance with UL 508.
A circuit in which power is supplied by the secondary coil of a transformer has to meet the following conditions.
- Maximum voltage (with no load):
  30 Vrms (42.4 V peak) or less
- Maximum current:
  (1) 8 A or less (including when short circuited)
  (2) limited by circuit protector (such as fuse) with the following ratings.

No load voltage (V peak)	Max. current rating
0 to 20 [V]	5.0
Above 20 to 30 [V]	$\frac{100}{\text{Peak voltage}}$

(2) A circuit using max. 30 Vrms or less (42.4 V peak), which is powered by UL1310 or UL1585 compatible Class-2 power supply.

⚠ Caution

3. Sensor used for suction detection.
When the sensor is used to detect the suction, select the flow rate range based on the operating vacuum pressure and suction nozzle diameter.
Refer to page 1, "Nozzle Diameter and Flow Characteristics."

4. Pay attention to the response speed.
When the sensor is used to detect the suction, the response speed of the sensor might be delayed due to the piping volume between the suction nozzle and sensor. Therefore, take measures to reduce the piping volume.

5. The analogue output may fluctuate by 2 to 3% for 5 minutes once the power is supplied.

Mounting

⚠ Caution

1. Monitor the flow direction of the fluid.
Install and connect piping so that fluid flows in the direction of the arrow indicated on the body.

2. Remove dirt and dust from inside the piping before connecting to the sensor.

3. Observe the proper tightening torque.
When the sensor is tightened beyond the specified tightening torque, the sensor may be damaged:
- Tightening torque for mounting part (Direct mount, Bracket mount): 0.32 ± 0.02 N·m
- Tightening torque for fitting part: 1 to 1.5 N·m

4. Never mount the sensor in a place that will be used as a scaffold.
The sensor could break if subjected to excessive load such as being accidentally stepped on.

5. Do not drop or bump.
Do not drop, bump, or apply excessive impacts while handling. Although the external body of the sensor (sensor case) may not be damaged, the inside of the sensor could be damaged and cause a malfunction.

6. Hold the body of the sensor when handling.
The tensile strength of the cord is 49 N. Applying a greater pulling force on it can cause a malfunction. When handling, hold the body of the sensor (do not handle it from the cord).

7. Do not use until you can verify that equipment can operate properly.
Following mounting, repair, or retrofit, verify correct mounting by conducting suitable function and leakage tests after piping and power connections have been made.

Series PFMV5
Specific Product Precautions 2

Be sure to read this before handling.
Refer to the back of page 1 for Safety Instructions and "Precautions for Handling Pneumatic Devices" (M-03-E3A) for Common Precautions.

Mounting

⚠ Caution

8. Apply a wrench only to the designated part when installing the flow sensor in the system piping.

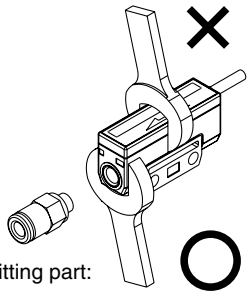

Tightening torque for fitting part:
1 to 1.5 N·m

9. When sensors are mounted as a manifold, pay attention to the dimensions of the connected fittings.
If the dimensions of the fittings are larger than those of sensors, they will be interfered with each other and the sensors cannot be mounted properly.

Wiring

⚠ Warning

1. Verify the colour and the terminal number when wiring.
Incorrect wiring can cause the sensor to be damaged and malfunction. Verify the colour and the terminal number in the instruction manual when wiring.

2. Avoid repeatedly bending or stretching the lead wire.
Repeated applying bending stress or stretching force to the lead wire will cause it to break.

3. Confirm proper insulation of wiring.
Make sure that there is no faulty wiring insulation (contact with other circuits, ground fault, improper insulation between terminals, etc.). Damage may occur due to excess current flow into the sensor.

4. Do not connect wiring while energising the product.
The sensor and any equipment connected to it could break and malfunction.

Operating Environment

⚠ Warning

1. Never use in the presence of explosive gases.
The sensor does not have an explosion proof rating. Never use in the presence of an explosive gas as this may cause a serious explosion.

2. Mount the sensor in a location where there is no vibration or no impact.
The sensor output may fluctuate if the sensor and connecting piping move.

3. Fix the sensor and connecting piping.
The sensor output may fluctuate if the sensor and connected piping are not correctly fixed.

4. Do not use in an area where surges are generated.
When there are units that generate a large amount of surge in the area around a sensor, (e.g., solenoid type lifters, high frequency induction furnaces, motors, etc.) this may cause deterioration or damage to the sensor's internal circuitry. Avoid sources of surge generation and crossed lines.

5. Sensors are not equipped with surge protection against lightning.
The flow sensors are CE compliant; however, they are not equipped with surge protection against lightning. Lightning surge protection measures should be applied directly to system components as necessary.

6. Avoid using the sensor in an environment where the likelihood of splashing or spraying of liquids exists.
The sensor is an open type so avoid its use in an environment where liquid splashing or spraying exists.

7. Do not use the product in an environment subject to a temperature cycle.
If the product is subject to a temperature cycle other than natural changes in air temperature, the internal components of the sensor could be adversely affected.

8. Do not mount the product in locations where it is exposed to radiant heat.
This could result in damage and/or malfunction.

Specific Product Precautions 3

Be sure to read this before handling.
Refer to the back of page 1 for Safety Instructions and "Precautions for Handling Pneumatic Devices" (M-03-E3A) for Common Precautions.

Maintenance

⚠ Warning

1. **Perform periodical inspections to ensure proper operation of the sensor.**
   Unexpected malfunctions may cause possible danger.
2. **Take precautions when using the sensor for an interlock circuit.**
   When a sensor is used for the interlock circuit, devise a multiple interlock system to prevent trouble or malfunctioning, and verify the operation of the sensor and interlock function on a regular basis.
3. **Do not make any modifications to the product.**
   It may cause human injuries and damage.
4. **When maintenance work is performed, the following points should be noted.**
   - Turn off the power supply.
   - Cut off the fluid supply, drain the fluid from the piping and ensure the fluid is released to atmosphere before carrying out maintenance. Otherwise, it could cause injury.

⚠ Caution

1. **Do not wipe the product with chemicals such as benzene or thinner.**
   Such chemicals could damage the product.
2. **Do not poke the inside of the piping port with a stick.**
   The rectifier could break, making the product unable to sustain the desired performance.
3. **Do not touch terminals when energising the product.**
   It could cause electric shock, malfunction, or damage to the sensor.

Fluid

⚠ Warning

1. **Check regulators and flow adjustment valves before introducing the fluid.**
   If pressure or flow rate beyond the specified range are applied to the sensor, the sensor unit may be damaged.
2. **Install a filter on the inlet side when there is a possibility of foreign matter being mixed in with the fluid.**
3. **Use dry air of quality compliant with JIS B 8392-1 1.1.2 to 1.6.2: 2003, ISO8573-1 1.1.2 to 1.6.2: 2001 for this product.**
   If any mist or drainage present in the air attaches to the product, accurate measurement will no longer be possible.

Specific Product Precautions 4

Be sure to read this before handling.
Refer to the back of page 1 for Safety Instructions and "Precautions for Handling Pneumatic Devices" (M-03-E3A) for Common Precautions.

Rated Flow Range

⚠ Caution

Set the flow rate within the rated flow rate range.

The rated flow range is the range of flow rate that satisfies the sensor specifications (accuracy, linearity, etc.).

Sensor	Rated flow range						
	–3 ℓ/min	–1 ℓ/min	–0.5 ℓ/min	0 ℓ/min	0.5 ℓ/min	1 ℓ/min	3 ℓ/min
PFMV505					■		
PFMV510					■	■	
PFMV530					■	■	■
PFMV505F			■	■	■		
PFMV510F		■	■	■	■	■	
PFMV530F	■	■	■	■	■	■	■

Series PFMV3
Specific Product Precautions 5

Be sure to read this before handling.
Refer to the back of page 1 for Safety Instructions and "Precautions for Handling Pneumatic Devices" (M-03-E3A) for Common Precautions.

■ Flow Monitor

Design and Selection

⚠ Warning

1. Operate the switch only within the specified voltage.

Use of the switch outside of the specified voltage range can cause not only malfunction and damage of the switch, but also electrocution and fire.

2. Do not exceed the maximum allowable load specification.

A load exceeding the maximum load specification can cause damage to the switch.

3. Do not use a load that generates surge voltage.

Although surge protection is installed in the circuit at the output side of the switch, damage may still occur if a surge is applied repeatedly. When a surge generating a load such as a relay or solenoids is directly driven, we use a type of switch with a built-in surge absorbing element.

4. Monitor the internal voltage drop of a switch.

When operating below the specified voltage, it is possible that a load may be ineffective, even though the pressure switch function is normal. Therefore, the formula below should be satisfied after confirming the voltage of the load.

Supply voltage	−	Internal voltage drop of switch	>	Minimum operating voltage of load

5. To prevent damage due to failure and/or malfunction of the product, establish a backup system such as a fail-safe system which enables multiple-stage type operation of the equipment and machinery.

6. When the product is for an interlock circuit, the following points should be noted.

- Provide double interlocking through another system (mechanical protection function, etc.).
- Perform checks to ensure the product is operating properly, as there is a risk of injury.

⚠ Caution

1. Ensure sufficient space for maintenance activities.

Provide space required for maintenance.

2. The direct-current power supply to combine should be UL authorized power supply.

(1) Limited voltage current circuit in accordance with UL 508.
A circuit in which power is supplied by the secondary coil of a transformer has to meet the following conditions.
- Maximum voltage (with no load):
  30 Vrms (42.4 V peak) or less
- Maximum current:
  (1) 8 A or less (including when short circuited)
  (2) limited by circuit protector (such as fuse) with the following ratings.

No load voltage (V peak)	Max. current rating
0 to 20 [V]	5.0
Above 20 to 30 [V]	$\frac{100}{\text{Peak voltage}}$

(2) A circuit using max. 30 Vrms or less (42.4 V peak), which is powered by UL1310 or UL1585 compatible Class-2 power supply.

⚠ Caution

3. Data of the switch are stored even after the power supply is turned off.

Input data is stored in an EEPROM so that the data will not be lost after the flow switch is turned off. (The data can be rewritten for up to one million times, and stored for up to 20 years.)

Mounting

⚠ Warning

1. Do not drop or bump.

Do not drop, bump, or apply excessive impacts (490 m/s^2) while handling. Although the external body of a switch (switch case) may not be damaged, the inside of the switch could be damaged and cause a malfunction.

2. Do not use until you can verify that equipment can operate properly.

Following mounting, repair, or retrofit, verify correct mounting by conducting suitable function and leakage tests after piping and power connections have been made.

3. Never mount the switch in a place that will be used as a scaffold during piping.

⚠ Caution

1. Do not mount the switch in a place that will be used as a scaffold.

The switch could break if subjected to excessive load such as being accidentally stepped on.

Wiring

⚠ Warning

1. Verify the colour and the terminal number when wiring.

Incorrect wiring can cause the switch to be damaged and malfunction. Verify the colour and the terminal number in the instruction manual when wiring.

2. Avoid repeatedly bending or stretching the lead wire.

Repeated applying bending stress or stretching force to the lead wire will cause it to break.

3. Confirm proper insulation of wiring.

Make sure that there is no faulty wiring insulation (contact with other circuits, ground fault, improper insulation between terminals, etc.). Damage may occur due to excess current flow into the switch.

4. Do not wire in conjunction with power lines or high voltage lines.

Wire separately from power lines and high voltage lines, and avoid wiring in the same conduit with these lines. Control circuits, including switches, may malfunction due to noise from these lines.

Specific Product Precautions 6

Be sure to read this before handling.
Refer to the back of page 1 for Safety Instructions and "Precautions for Handling Pneumatic Devices" (M-03-E3A) for Common Precautions.

Wiring

⚠ Warning

5. Do not short-circuit a load.

Although the switch displays an overcurrent error if a load is short-circuited, there is not protection against incorrect wiring (power source polarity, etc.). Avoid wiring incorrectly.

6. Do not connect wiring while energising the product.

The switch and any equipment connected to it could break and malfunction.

Operating Environment

⚠ Warning

1. Never use in the presence of explosive gases.

The switch does not have an explosion proof rating. Never use in the presence of an explosive gas as this may cause a serious explosion.

2. Mount the switch in a location where there is no vibration greater than 98 m/s², or no impact greater than 490 m/s².

3. Do not use in an area where surges are generated.

When there are units that generate a large amount of surge in the area around a pressure switch, (e.g., solenoid type lifters, high frequency induction furnaces, motors, etc.) this may cause deterioration or damage to the switch's internal circuitry. Avoid sources of surge generation and crossed lines.

4. Switches are not equipped with surge protection against lightning.

The flow switches are CE compliant; however, they are not equipped with surge protection against lightning. Lightning surge protection measures should be applied directly to system components as necessary.

5. Avoid using the switch in an environment where the likelihood of splashing or spraying of liquids exists.

The switch is an open type so avoid its use in an environment where liquid splashing or spraying exists.

6. Do not use the product in an environment subject to a temperature cycle.

If the product is subject to a temperature cycle other than natural changes in air temperature, the internal components of the switch could be adversely affected.

7. Do not mount the product in locations where it is exposed to radiant heat.

This could result in damage and/or malfunction.

Maintenance

⚠ Warning

1. Perform periodical inspections to ensure proper operation of the switch.

Unexpected malfunctions may cause possible danger.

2. Take precautions when using the switch for an interlock circuit.

When a pressure switch is used for the interlock circuit, devise a multiple interlock system to prevent trouble or malfunctioning, and verify the operation of the switch and interlock function on a regular basis.

3. Do not make any modifications to the product.

It may cause human injuries and damage.

4. When maintenance work is performed, the following points should be noted.

- Turn off the power supply.

⚠ Caution

1. Do not wipe the product with chemicals such as benzene or thinner.

Such chemicals could damage the product.

4. Do not touch terminals or connectors when energising the product.

It could cause electric shock, malfunction, or damage to the switch.

Others

⚠ Warning

1. After the power is turned on, the switch's output remains off while a message is displayed. Therefore, start the measurement after a value is displayed.

2. Perform settings after stopping control systems.

Operation reflects the new values when settings are made. However, if the power is turned OFF in that state, the settings return to the values before the change when the power is turned ON again. Make sure to press the S button to save any setting changes before turning OFF the power.

Specific Product Precautions 7

Be sure to read this before handling.
Refer to the back of page 1 for Safety Instructions and "Precautions for Handling Pneumatic Devices" (M-03-E3A) for Common Precautions.

Settable Range and Voltage Input Range

⚠ Caution

The settable rate range is the range that can be set in the switch.
The inputtable range is the range that satisfies the switch specifications (accuracy, linearity, etc.).
It is possible to set a value outside of the inputtable range if it is within the settable range, however, the specifications are not guaranteed.

Item	Input voltage
Voltage input range Displayable range Settable range	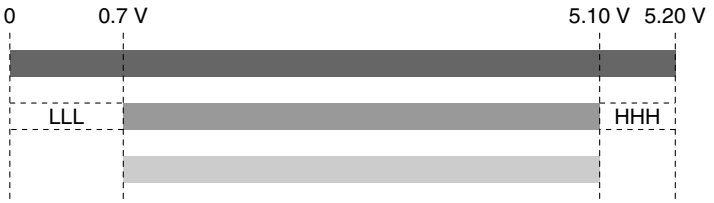

SMC

SMC

EUROPEAN SUBSIDIARIES:

Austria
SMC Pneumatik GmbH (Austria).
Girakstrasse 8, A-2100 Korneuburg
Phone: +43 2262-62280, Fax: +43 2262-62285
E-mail: office@smc.at
http://www.smc.at

Belgium
SMC Pneumatics N.V./S.A.
Nijverheidsstraat 20, B-2160 Wommelgem
Phone: +32 (0)3-355-1464, Fax: +32 (0)3-355-1466
E-mail: post@smcpneumatics.be
http://www.smcpneumatics.be

Bulgaria
SMC Industrial Automation Bulgaria EOOD
16 kliment Ohridski Blvd., fl.13 BG-1756 Sofia
Phone:+359 2 9744492, Fax:+359 2 9744519
E-mail: office@smc.bg
http://www.smc.bg

Croatia
SMC Industrijska automatika d.o.o.
Crnomerec 12, 10000 ZAGREB
Phone: +385 1 377 66 74, Fax: +385 1 377 66 74
E-mail: office@smc.hr
http://www.smc.hr

Czech Republic
SMC Industrial Automation CZ s.r.o.
Hudcova 78a, CZ-61200 Brno
Phone: +420 5 414 24611, Fax: +420 5 412 18034
E-mail: office@smc.cz
http://www.smc.cz

Denmark
SMC Pneumatik A/S
Knudsminde 4B, DK-8300 Odder
Phone: +45 70252900, Fax: +45 70252901
E-mail: smc@smc-pneumatik.dk
http://www.smcdk.com

Estonia
SMC Pneumatics Estonia OÜ
Laki 12, 106 21 Tallinn
Phone: +372 6510370, Fax: +372 65110371
E-mail: smc@smcpneumatics.ee
http://www.smcpneumatics.ee

Finland
SMC Pneumatics Finland Oy
PL72, Tiistinniityntie 4, SF-02231 ESPOO
Phone: +358 207 513513, Fax: +358 207 513595
E-mail: smcfi@smc.fi
http://www.smc.fi

France
SMC Pneumatique, S.A.
1, Boulevard de Strasbourg, Parc Gustave Eiffel
Bussy Saint Georges F-77607 Marne La Vallee Cedex 3
Phone: +33 (0)1-6476 1000, Fax: +33 (0)1-6476 1010
E-mail: contact@smc-france.fr
http://www.smc-france.fr

Germany
SMC Pneumatik GmbH
Boschring 13-15, D-63329 Egelsbach
Phone: +49 (0)6103-4020, Fax: +49 (0)6103-402139
E-mail: info@smc-pneumatik.de
http://www.smc-pneumatik.de

Greece
SMC Hellas EPE
Anagenniseos 7-9 - P.C. 14342. N. Philadelphia, Athens
Phone: +30-210-2717265, Fax: +30-210-2717766
E-mail: sales@smchellas.gr
http://www.smchellas.gr

Hungary
SMC Hungary Ipari Automatizálási Kft.
Budafoki ut 107-113, H-1117 Budapest
Phone: +36 1 371 1343, Fax: +36 1 371 1344
E-mail: office@smc.hu
http://www.smc.hu

Ireland
SMC Pneumatics (Ireland) Ltd.
2002 Citywest Business Campus, Naas Road, Saggart, Co. Dublin
Phone: +353 (0)1-403 9000, Fax: +353 (0)1-464-0500
E-mail: sales@smcpneumatics.ie
http://www.smcpneumatics.ie

Italy
SMC Italia S.p.A
Via Garibaldi 62, I-20061Carugate, (Milano)
Phone: +39 (0)2-92711, Fax: +39 (0)2-9271365
E-mail: mailbox@smcitalia.it
http://www.smcitalia.it

Latvia
SMC Pneumatics Latvia SIA
Smerla 1-705, Riga LV-1006
Phone: +371 781-77-00, Fax: +371 781-77-01
E-mail: info@smclv.lv
http://www.smclv.lv

Lithuania
SMC Pneumatics Lietuva, UAB
Oslo g.1, LT-04123 Vilnius
Phone: +370 5 264 81 26, Fax: +370 5 264 81 26

Netherlands
SMC Pneumatics BV
De Ruyterkade 120, NL-1011 AB Amsterdam
Phone: +31 (0)20-5318888, Fax: +31 (0)20-5318880
E-mail: info@smcpneumatics.nl
http://www.smcpneumatics.nl

Norway
SMC Pneumatics Norway A/S
Vollsveien 13 C, Granfos Næringspark N-1366 Lysaker
Tel: +47 67 12 90 20, Fax: +47 67 12 90 21
E-mail: post@smc-norge.no
http://www.smc-norge.no

Poland
SMC Industrial Automation Polska Sp.z.o.o.
ul. Poloneza 89, PL-02-826 Warszawa,
Phone: +48 22 211 9600, Fax: +48 22 211 9617
E-mail: office@smc.pl
http://www.smc.pl

Portugal
SMC Sucursal Portugal, S.A.
Rua de Engº Ferreira Dias 452, 4100-246 Porto
Phone: +351 22-610-89-22, Fax: +351 22-610-89-36
E-mail: postpt@smc.smces.es
http://www.smces.es

Romania
SMC Romania srl
Str Frunzei 29, Sector 2, Bucharest
Phone: +40 213205111, Fax: +40 213261489
E-mail: smcromania@smcromania.ro
http://www.smcromania.ro

Russia
SMC Pneumatik LLC.
4B Sverdlovskaja nab, St. Petersburg 195009
Phone.:+7 812 718 5445, Fax:+7 812 718 5449
E-mail: info@smc-pneumatik.ru
http://www.smc-pneumatik.ru

Slovakia
SMC Priemyselná Automatizáciá, s.r.o.
Námestie Matina Benku 10, SK-81107 Bratislava
Phone: +421 2 444 56725, Fax: +421 2 444 56028
E-mail: office@smc.sk
http://www.smc.sk

Slovenia
SMC industrijska Avtomatika d.o.o.
Mirnska cesta 7, SLO-8210 Trebnje
Phone: +386 7 3885412 Fax: +386 7 3885435
E-mail: office@smc.si
http://www.smc.si

Spain
SMC España, S.A.
Zuazobidea 14, 01015 Vitoria
Phone: +34 945-184 100, Fax: +34 945-184 124
E-mail: post@smc.smces.es
http://www.smces.es

Sweden
SMC Pneumatics Sweden AB
Ekhagsvägen 29-31, S-141 71 Huddinge
Phone: +46 (0)8-603 12 00, Fax: +46 (0)8-603 12 90
E-mail: post@smcpneumatics.se
http://www.smc.nu

Switzerland
SMC Pneumatik AG
Dorfstrasse 7, CH-8484 Weisslingen
Phone: +41 (0)52-396-3131, Fax: +41 (0)52-396-3191
E-mail: info@smc.ch
http://www.smc.ch

Turkey
Entek Pnömatik San. ve Tic. A*.
Perpa Ticaret Merkezi B Blok Kat:11 No: 1625, TR-34386, Okmeydani, Istanbul
Phone: +90 (0)212-444-0762, Fax: +90 (0)212-221-1519
E-mail: smc@entek.com.tr
http://www.entek.com.tr

UK
SMC Pneumatics (UK) Ltd
Vincent Avenue, Crownhill, Milton Keynes, MK8 0AN
Phone: +44 (0)800 1382930 Fax: +44 (0)1908-555064
E-mail: sales@smcpneumatics.co.uk
http://www.smcpneumatics.co.uk

OTHER SUBSIDIARIES WORLDWIDE:

ARGENTINA, AUSTRALIA, BOLIVIA, BRASIL, CANADA, CHILE, CHINA, HONG KONG, INDIA, INDONESIA, MALAYSIA, MEXICO, NEW ZEALAND, PHILIPPINES, SINGAPORE, SOUTH KOREA, TAIWAN, THAILAND, USA, VENEZUELA

http://www.smc.eu
http://www.smcworld.com

SMC CORPORATION Akihabara UDX 15F, 4-14-1, Sotokanda, Chiyoda-ku, Tokyo 101-0021, JAPAN Phone: 03-5207-8249 FAX: 03-5298-5362

1st printing MO printing MO 00 Printed in Spain